TECHNICAL DATA SHEET

Mini Co-Extruded Beam – Exterior

SARO TECH

- Waterproof
- Adaptable to Weather Changes
- Environmentally Friendly
- Easy Maintenance
- Does not Attract Termites

ISOMETRIC VIEW

Dimensions in inches

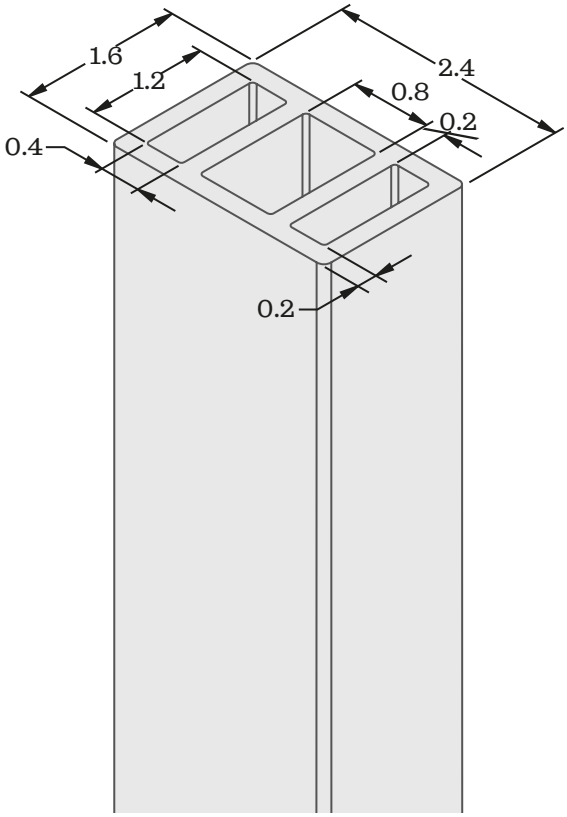

AVAILABLE COLORS

A13
Brushed Teak

A42
Brushed Walnut

A50
Brushed Antique

MATERIAL SPECIFICATIONS

Material:	WPC (Wood Plastic Composite)
Application:	Exterior
Sales Presentation:	Piece
Length per Piece:	9.5 ft
Weight per Piece:	8.8 lb

MATERIAL COMPOSITION AND PHYSICOCHEMICAL TESTS

Components	Results
Composition	50% Wood Powder/ 40% HDPE/ 10% Chemical Additives 1.29
Density (g/cm³)	gr/cm³
Water Absorption (28 Days Immersion)	4%
Linear Thermal Expansion	43.9 X 10-6 / C (24.4 X 10-6 / F)
Elastic Recovery Rate	81%
Formaldehyde Content	Not Detected
Abrasion Resistance	31 mg/1000r
Artificial Weathering Resistance	After 2000 Hours of Exposure ΔE*=0.61 Gray Scale=4-5
Flexural Strength	15.55 MPA
Resistance to a 500 N Load	2.90 mm
Modulus of Elasticity	1892 MPA
Load Capacity (400 mm Span)	3751N
Impact Resistance	4.2 KJ/m2 ≈ 2.00 ft-lb / in2
Fire Classification	C-s1, d0

PIECE DIMENSIONS

Height: 1.57 in - Width: 2.36 in - Length: 9.5 ft

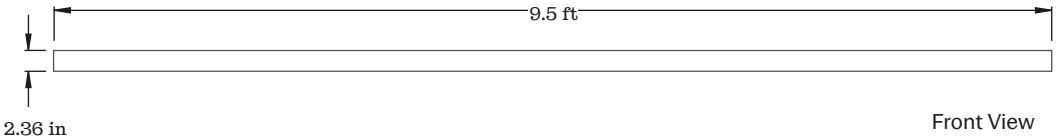

Front View

18 YEAR WARRANTY AGAISNT STRUCTURAL DAMAGE

Dimensions in feet and inches*

ISO FSC CE SGS